Things 8051

Merging all my notes related to 8051-based system development.

My personal code library for 8051 is available at codeberg.org.

Core 8051

Microcontroller/board info.

Board51:stc15w204s (8-pin)

Picture





Block diagram

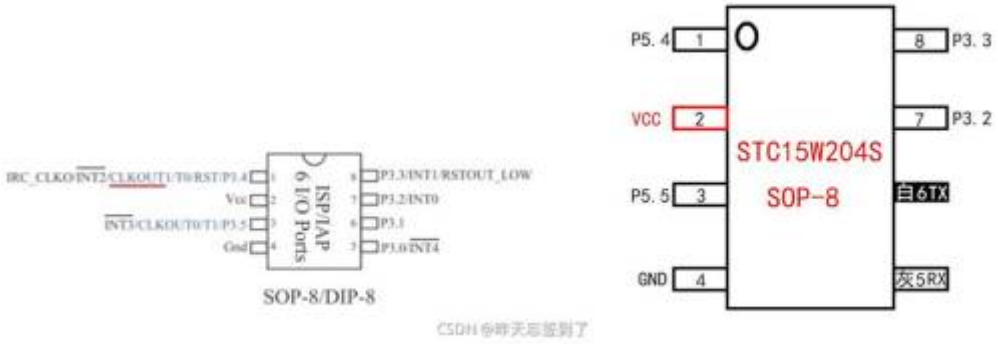

May need proper USB2serial cable (e.g. PL2303-based)

Connection:

- RED Wire – Power 5V, 500mA
- BLACK Wire – Ground
- WHITE Wire – RX
- GREEN Wire – TX

Features:

- Fully enclosed professional finish.
- Built-in PL2303 USB to Serial Controller
- Designed to be used for USB to TTL electronic projects
- TTL interface output, easy to connect to your MCU
- Dual 3.3V and 5V Power output (by Changing the red wire termination)
- Can independently power the circuit with 5V or 3.3V

2026/02/09 22:23

Code 8051

Example codes (in C) for the classical Intel-8051 (mcu51) microcontroller core. Using my1code51 library. Tested using sdcc open source compiler and stc12 device.

Code: IR module and Ultrasonic sensor module

Testing IR module and HC-SR04 ultrasonic sensor module.

test0_ir_hc.c

```
/*-------------------------------------------------------------------------
-------*/
#include "uart.h"
#include "timer.h"
#define FPSIZE 2
#include "utils_float.h"
#define _LCD_4BIT_INTERFACE_
/** DB4-DB7 => P0 (UPPER NIBBLE) */
/** E => P0.2 : NEEDS -ve EDGE */
/** R/W => P0.1 : 0=WR 1=RD */
/** RS => P0.0 : 0=CMD 1=DAT */
#include "textlcd.h"
/*-------------------------------------------------------------------------
-------*/
/**
```

```
 * Testing IR module and HC-SR04 ultrasonic sensor module
 * - display on both uart and lcd
**/
/*-------------------------------------------------------------------------
-------*/
MY1SBIT(IRMOD,PIN10);
MY1SBIT(TRIG,PIN16);
MY1SBIT(ECHO,PIN17);
/*-------------------------------------------------------------------------
-------*/
MY1SBIT(TEST_IR,PIN14);
MY1SBIT(TEST_HC,PIN15);
/*-------------------------------------------------------------------------
-------*/
#define FLAG_IR 0x01
#define FLAG_HC 0x02
/*-------------------------------------------------------------------------
-------*/
void main(void) {
    unsigned char wait;
    unsigned int tval,loop, flag;
    float fval, dist;
    char buff[16];
    uart_init();
    uart_puts("\r\nTESTING NMK322 STUFFS\r\n");
    lcd_init();
    lcd_goto_line1();
    lcd_puts("TESTKIT 4 NMK322");
    timer_init();
    flag = 0;
    while (1) {
        if (TEST_IR==0) {
            if ((flag&FLAG_IR)==0) {
                lcd_goto_line1();
                lcd_puts("TEST 4 IR MODULE");
                uart_puts("\r\nTESTING IR MODULE\r\n");
                flag = FLAG_IR;
            }
            lcd_goto_line2();
            lcd_puts("                ");
            lcd_goto_line2();
            lcd_puts("Waiting... ");
            uart_puts("\r\nWaiting... ");
            while (IRMOD); // outputs logic low when obstacle detected
            lcd_puts("|*");
            uart_puts("|*");
            while (!IRMOD);
            lcd_puts("|");
            uart_puts("|\r\n");
            for (loop=65000;loop;loop--);
        }
```

```
        if (TEST_HC==0) {
            if ((flag&FLAG_HC)==0) {
                lcd_goto_line1();
                lcd_puts("TEST HC-SR04 MOD");
                uart_puts("\r\nTESTING HC-SR04 MODULE\r\n");
                flag = FLAG_HC;
            }
            lcd_goto_line2();
            lcd_puts("                ");
            lcd_goto_line2();
            timer_prep(0);
            TRIG = 1;
            for (wait=10;wait;wait--); // arounf 10us?
            TRIG = 0;
            while (!ECHO); timer_exec();
            while (ECHO); timer_stop();
            tval = ((unsigned int)TH0<<8)|TL0;
            fval = (float)tval * 1.085; // in us
            dist = fval / 58.0; // in cm
            lcd_puts("Dist:");
            uart_puts("-- Distance=");
            float2str(buff,dist);
            lcd_puts(buff);
            lcd_puts("cm");
            uart_puts(buff);
            uart_puts(" cm\r\n");
            for (loop=65000;loop;loop--);
        }
    }
}
/*------------------------------------------------------------------------
-------*/
```

Code: BT module and servo

Testing HC06 bluetooth module , TowerPro MG996R servo.

test1_btservo.c

```
/*------------------------------------------------------------------------
-------*/
/**
 * Testing HC06 bluetooth module , TowerPro MG996R servo
 * - note: servo pin (1|orange:PWM)(2|red:vcc)(3|brown:ground)
**/
/*------------------------------------------------------------------------
-------*/
```

```
#define APPTITLE "NMK322 BT/SERVO"
#define BTNAME "nmk322bt"
#define BTPASS "0000"
#include "hc06.h"
#include "hc06_conf.h"
#include "uart.h"
#include "uart_hexascii.h"
#include "timer.h"
#include "utils.h"
#include "oled_ssd1306.h"
#include "cstr_hexascii.h"
/*-------------------------------------------------------------------------
-------*/
#define OLED_ROW_DATA 2
#define OLED_ROW_INFO1 4
#define OLED_ROW_INFO2 6
/*-------------------------------------------------------------------------
-------*/
#define SERVO_PIN P1_0
#include "servo.h"
/*-------------------------------------------------------------------------
-------*/
_sbit(GO000,PIN15);
_sbit(GO1MS,PIN16);
_sbit(GO2MS,PIN17);
/*-------------------------------------------------------------------------
-------*/
#define BUFFSIZE 128
/*-------------------------------------------------------------------------
-------*/
__xdata char buff[BUFFSIZE];
/*-------------------------------------------------------------------------
-------*/
void uart_show_buff(void) {
    char* pchk = buff;
    while (*pchk) {
        if (pchk[0]<0x20||pchk[0]>0x7e) {
            uart_puts("[0x");
            uart_send_hexbyte(pchk[0]);
            uart_send(']');
        }
        else uart_send(pchk[0]);
        pchk++;
    }
    uart_send('\n');
}
/*-------------------------------------------------------------------------
-------*/
void main(void) {
    unsigned char curr, test;
    GO000 = 1; GO1MS = 1; GO2MS = 1;
```

```
    timer_init();
    servo_init();
    i2c_init();
    oled1306_init();
    oled1306_puts(APPTITLE);
    uart_init();
    uart_puts("\n---------------\n");
    uart_puts(APPTITLE);
    uart_puts("\n---------------\n\n");
    hc06_init();
    curr = 3;
    do {
        uart_puts("-- Looking for HC06... ");
        oled1306_set_cursor(OLED_ROW_INFO1,0);
        oled1306_puts("Finding HC06... ");
        hc06_find();
        if (hc06_wait_ok()==HC06_OK) {
            uart_puts("OK.\r\n");
            oled1306_puts("OK");
            oled1306_set_cursor(OLED_ROW_INFO2,0);
            oled1306_puts("Setting up HC06... ");
            uart_puts("\r\nSet default name & pin\r\n");
            uart_puts("-- Set Name (");
            uart_puts(BTNAME);
            uart_puts("): ");
            hc06_setname(buff,BUFFSIZE);
            uart_puts(buff);
            uart_puts("\r\n");
            timer_delay1s(test,1);
            /* set pass */
            uart_puts("-- Set Pin (");
            uart_puts(BTPASS);
            uart_puts("): ");
            hc06_setpin(buff,BUFFSIZE);
            uart_puts(buff);
            uart_puts("\r\n");
            timer_delay1s(test,1);
            oled1306_puts("OK");
            timer_delay1s(test,1);
            oled1306_clear_row(OLED_ROW_INFO1);
            oled1306_clear_row(OLED_ROW_INFO2);
            break;
        }
        uart_puts("timeout.\n");
        timer_delay1s(test,1);
    } while (--curr);
    while (1) {
        if (hc06_peek()) {
            if ((test=hc06_wait(buff,BUFFSIZE))>1) {
                if (buff[0]=='#') {
                    if (test==BUFFSIZE) test--;
```

```
                    buff[test] = 0x0;
                    while (buff[test-1]=='\r'||buff[test-1]=='\n') {
                        test--;
                        buff[test] = 0x0;
                    }
                    curr = (unsigned char) str2uint(&buff[1]);
                    if (curr>=5&&curr<=25) {
                        uart_puts("## Turning to (");
                        uart_puts(&buff[1]);
                        uart_puts(")\r\n");
                        oled1306_set_cursor(OLED_ROW_DATA,0);
                        oled1306_puts("ServoTurn: ");
                        oled1306_puts(&buff[1]);
                        servo_turn(curr);
                        timer_delay1s(test,1);
                        oled1306_clear_row(OLED_ROW_DATA);
                    }
                    else {
                        uart_puts("** Invalid angle (");
                        uart_puts(&buff[1]);
                        uart_puts(")\r\n");
                    }
                }
                else {
                    uart_puts(">> ");
                    uart_puts(buff);
                    uart_puts("\r\n");
                }
            }
        }
        if (GO000==0) {
            oled1306_set_cursor(OLED_ROW_DATA,0);
            oled1306_puts("ServoTurn CENTER");
            servo_turn(15);
            while (!GO000);
            oled1306_clear_row(OLED_ROW_DATA);
        }
        if (GO1MS==0) {
            oled1306_set_cursor(OLED_ROW_DATA,0);
            oled1306_puts("ServoTurn PWM1ms");
            servo_turn(10); // 1ms pwm
            while (!GO1MS);
            oled1306_clear_row(OLED_ROW_DATA);
        }
        if (GO2MS==0) {
            oled1306_set_cursor(OLED_ROW_DATA,0);
            oled1306_puts("ServoTurn PWM2ms");
            servo_turn(20); // 2ms pwm
            while (!GO2MS);
            oled1306_clear_row(OLED_ROW_DATA);
        }
```

```
    }
}
/*------------------------------------------------------------------------
-------*/
```

Testing HC06 bluetooth module , TowerPro MG996R servo & Text LCD.

test1_btservolcd.c

```
/*------------------------------------------------------------------------
-------*/
/**
 * Testing HC06 bluetooth module , TowerPro MG996R servo & Text LCD
 * - note: servo pin (1|orange:PWM)(2|red:vcc)(3|brown:ground)
**/
/*------------------------------------------------------------------------
-------*/
#define BTNAME "nmk322bt"
#define BTPASS "0000"
#include "hc06.h"
#include "uart.h"
#include "timer.h"
#include "utils.h"
/*------------------------------------------------------------------------
-------*/
/** interface as defined in nmk322 lab module */
#define _LCD_8BIT_INTERFACE_
#define _LCD_PINS_DEFINED_
MY1SFR(LCD_DATA,0xA0);
MY1SBIT(LCD_BUSY,0xA7);
MY1SBIT(LCD_DNC,0x87);
MY1SBIT(LCD_RNW,0x86);
MY1SBIT(LCD_ENB,0x85);
/*------------------------------------------------------------------------
-------*/
#include "textlcd.h"
/*------------------------------------------------------------------------
-------*/
#define SERVO_PIN P1_0
#include "servo.h"
/*------------------------------------------------------------------------
-------*/
MY1SBIT(GO000,PIN15);
MY1SBIT(GO1MS,PIN16);
MY1SBIT(GO2MS,PIN17);
/*------------------------------------------------------------------------
-------*/
#define BUFFSIZE 128
```

```
/*-------------------------------------------------------------------------
-------*/
__xdata char buff[BUFFSIZE];
/*-------------------------------------------------------------------------
-------*/
void main(void) {
    unsigned char curr, test;
    GO000 = 1; GO1MS = 1; GO2MS = 1;
    timer_init();
    servo_init();
    lcd_init();
    lcd_goto_line1();
    lcd_puts("NMK322 SV/LCD/BT");
    uart_init();
    uart_puts("NMK322 SV/LCD/BT\r\n\r\n");
    hc06_init();
    curr = 3;
    do {
        uart_puts("-- Sending AT... ");
        hc06_find();
        if (hc06_wait_ok()==HC06_OK) {
            uart_puts("OK.\r\n");
            uart_puts("\r\nSet default name & pin\r\n");
            uart_puts("-- Set Name (");
            uart_puts(BTNAME);
            uart_puts("): ");
            hc06_setname(buff,BUFFSIZE);
            uart_puts(buff);
            uart_puts("\r\n");
            timer_delay1s(test,1);
            /* set pass */
            uart_puts("-- Set Pin (");
            uart_puts(BTPASS);
            uart_puts("): ");
            hc06_setpin(buff,BUFFSIZE);
            uart_puts(buff);
            uart_puts("\r\n");
            timer_delay1s(test,1);
            break;
        }
        uart_puts("timeout.\n");
        timer_delay1s(test,1);
    } while (--curr);
    while (1) {
        if (hc06_peek()) {
            if (hc06_wait(buff,BUFFSIZE)>1) {
                if (buff[0]=='#') {
                    curr = (unsigned char) str2uint(&buff[1]);
                    if (curr>=5&&curr<=25) {
                        uart_puts("## Turning to (");
                        uart_puts(&buff[1]);
```

```
                        uart_puts(")\r\n");
                        servo_turn(curr);
                    } else {
                        uart_puts("** Invalid angle (");
                        uart_puts(&buff[1]);
                        uart_puts(")\r\n");
                    }
                } else {
                    uart_puts(">> ");
                    uart_puts(buff);
                    uart_puts("\r\n");
                }
            }
        }
        if (GO000==0) {
            lcd_goto_line2();
            lcd_puts("ServoTurn CENTER");
            servo_turn(15);
            while (!GO000);
            lcd_goto_line2();
            lcd_puts("                ");
        }
        if (GO1MS==0) {
            lcd_goto_line2();
            lcd_puts("ServoTurn PWM1ms");
            servo_turn(10); // 1ms pwm
            while (!GO1MS);
            lcd_goto_line2();
            lcd_puts("                ");
        }
        if (GO2MS==0) {
            lcd_goto_line2();
            lcd_puts("ServoTurn PWM2ms");
            servo_turn(20); // 2ms pwm
            while (!GO2MS);
            lcd_goto_line2();
            lcd_puts("                ");
        }
    }
}
/*------------------------------------------------------------------------
-------*/
```

Code: RFID module and OLED

Testing RFID (FRC522) and OLED (ssd1306).

test2_rfid.c

```
/*-------------------------------------------------------------------------
-------*/
#include "uart_hexascii.h"
#include "oled_ssd1306.h"
#include "cstr_hexascii.h"
#include "frc522.h"
#define APPTITLE "NMK322 RFID/OLED"
/*-------------------------------------------------------------------------
-------*/
void main(void) {
    __xdata cstr_t buff; /* default: 64-bytes long */
    unsigned char temp, stat, loop, size;
    unsigned char pdat[FRC522_MAX_RXSIZE], reqa[2];
    /** initialize */
    cstr_init(&buff);
    uart_init();
    i2c_init();
    oled1306_init();
    spi_init();
    atqa = reqa;
    /* initialize mf contactless card reader */
    /** say something... */
    uart_puts("\n----------------\n");
    uart_puts(APPTITLE);
    uart_puts("\n----------------\n\n");
    oled1306_puts(APPTITLE);
    temp = frc522_init();
    if (!temp||temp==0xff) {
        uart_puts("** Cannot find FRC522 hardware! Aborting!\n");
        oled1306_set_cursor(5,0);
        oled1306_puts("** Hardware Error!");
        hang();
    }
    uart_puts("FRC522 found. Firmware version is 0x");
    uart_send_hexbyte(temp);
    uart_puts(".\n");
    cstr_null(&buff);
    cstr_append(&buff,"FW Vers: 0x");
    cstr_append_hexbyte(&buff,temp);
    oled1306_set_cursor(5,0);
    oled1306_puts(buff.buff);
    /** main loop */
    while (1) {
        stat = frc522_scan(pdat,&size);
        if (stat==FRC522_OK) {
            uart_puts("## TAG(");
            uart_send_hexbyte(stat);
            uart_puts("|");
            uart_send_hexbyte(reqa[0]);
```

```
            uart_puts(",");
            uart_send_hexbyte(reqa[1]);
            uart_puts("):");
            cstr_null(&buff);
            for (loop=0;loop<size-1;loop++) { /** UID is size-1 bytes
*/
                uart_send('[');
                uart_send_hexbyte(pdat[loop]);
                cstr_append_hexbyte(&buff,pdat[loop]);
                uart_send(']');
            }
            uart_send('\n');
            oled1306_set_cursor(2,0);
            oled1306_puts("#TAG: ");
            oled1306_puts(buff.buff);
            loop_delay(3000);
            oled1306_clear_row(2);
        }
        else if (stat!=FRC522_ERROR_NO_TAG&&stat!=FRC522_ERROR_REQ_A) {
            uart_puts("** Scan Failed (0x");
            uart_send_hexbyte(stat);
            uart_puts("):");
            for (loop=0;loop<FRC522_MAX_RXSIZE;loop++) {
                uart_send('[');
                uart_send_hexbyte(pdat[loop]);
                uart_send(']');
            }
            uart_send('\n');
            oled1306_set_cursor(3,0);
            oled1306_puts("*TAG: ERROR!");
            loop_delay(3000);
            oled1306_clear_row(3);
        }
    }
}
/*-------------------------------------------------------------------------
-------*/
```

Code: Testing Base Kit

Testing Base Kit (202425s1).

test0_base.c

```
/*-------------------------------------------------------------------------
-------*/
/* override default tick values */
```

```
#define TIMER_TICK_LEN TIMER_VAL50MS
#define TIMER_TICK_CNT TIMER_LOOP_1S
/*-------------------------------------------------------------------------
-------*/
#include "my1stc51.h"
#include "timer_tick.h"
#include "led7seg.h"
/*-------------------------------------------------------------------------
-------*/
void main(void) {
    unsigned char loop, mask, seg7[] = { _7SEGNUM_CC_ };
    P1MODE1(); // better pullup current
    loop = 0; mask = (!P2_7)?0xff:0x00;
    P1 = seg7[loop] ^ mask;
    timer_init();
    timer_tick_exec();
    while (1) {
        P2_0 = !P3_7;
        P2_1 = !P3_6;
        P2_2 = !P3_5;
        P2_3 = !P3_4;
        if (timer_ticked()) {
            loop++; if (loop==10) loop = 0;
            mask = (!P2_7)?0xff:0x00;
            P1 = seg7[loop] ^ mask;
            timer_tick00();
        }
    }
}
/*-------------------------------------------------------------------------
-------*/
```

Code: gtuc51

Test code for the old GTUC51B001 development board.

gtuc51.c

```
/*-------------------------------------------------------------------------
-------*/
/**
 * Demo program for gtuc51 (with io board)
**/
/*-------------------------------------------------------------------------
-------*/
#include "adc0831.h"
#include "keypad_922.h"
```

```
#include "textlcd.h"
#include "utils_float.h"
/*-------------------------------------------------------------------------
-------*/
/**
 * Switch & LED Interface for gtuc51 i/o board
 *   - multiplexed (dual/purpose)
 *   - require jumper link settings!
**/
/** SW0, SW1 => P3.3, P3.2 - LAYOUT ERROR */
__sbit __at (0xB3) SW0;
__sbit __at (0xB2) SW1;
/** LED{0-3} => P3.4-P3.7 */
__sbit __at (0xB4) LED0;
__sbit __at (0xB5) LED1;
__sbit __at (0xB6) LED2;
__sbit __at (0xB7) LED3;
/** LED{RX,TX} => P3.1, P3.0 - LAYOUT ERROR */
__sbit __at (0xB1) LEDRX;
__sbit __at (0xB0) LEDTX;
/** alias LEDX=-2 and LEDY=-1 (LEFT OF LED0) **/
__sbit __at (0xB1) LEDX;
__sbit __at (0xB0) LEDY;
/*-------------------------------------------------------------------------
-------*/
char display[LCD_MAX_CHAR];
unsigned char lcdi, loop;
float value;
keybyte_t keyin;
adcbyte_t check;
__bit adc, adcgo, left, demo;
/*-------------------------------------------------------------------------
-------*/
#define DEMO_IO 1
#define DEMO_ADC 0
/*-------------------------------------------------------------------------
-------*/
#define LOOP_COUNT 20
/*-------------------------------------------------------------------------
-------*/
/* interrupt service routine for timer0 */
void timer_blink(void) __interrupt TF0_VECTOR {
    TR0 = 0; loop--;
    P1 = ~P1;
    if (loop==0) {
        if (!left) {
            loop = LED0; LED0 = LED1; LED1 = LED2; LED2 = LED3;
            LED3 = LEDX; LEDX = LEDY; LEDY = loop;
        }
        else {
            loop = LED3; LED3 = LED2; LED2 = LED1; LED1 = LED0;
```

```
            LED0 = LEDY; LEDY = LEDX; LEDX = loop;
        }
        loop = LOOP_COUNT;
    }
    TH0 = 0x4B; TL0 = 0xFD; TR0 = 1; /** 50ms */
}
/*-------------------------------------------------------------------------
-------*/
/* interrupt service routine for timer1 */
void timer_goadc(void) __interrupt TF1_VECTOR {
    TR1 = 0; TH1 = 0x4B; TL1 = 0xFD;
    if (loop>0) {
        TR1 = 1; /** 50ms */
        loop--;
    }
    else {
        loop = LOOP_COUNT;
        adcgo = adc;
    }
}
/*-------------------------------------------------------------------------
-------*/
/* interrupt service routine for int1 */
void check_switch0(void) __interrupt IE1_VECTOR {
    left = 0;
    if (lcdi<LCD_MAX_CHAR) {
        lcd_data(0x30);
        lcdi++;
    }
}
/*-------------------------------------------------------------------------
-------*/
/* interrupt service routine for int0 */
void check_switch1(void) __interrupt IE0_VECTOR {
    left = 1;
    if (lcdi<LCD_MAX_CHAR) {
        lcd_data(0x31);
        lcdi++;
    }
}
/*-------------------------------------------------------------------------
-------*/
/* main function */
void main(void) {
    /** initalize stuffs */
    demo = DEMO_IO; /* default... just in case */
    TMOD = 0x11; P1 = 0xFF; P3 = 0xFF;
    lcd_init();
    lcd_goto_line1();
    lcd_puts("8051 Select Demo");
    lcd_goto_line2();
```

```
    lcd_puts("[SW0]IO [SW1]ADC");
    /* wait for user key press */
    while (1) {
        if (!SW0) {
            demo = DEMO_IO; /* demo switch, led, keypad and P1 */
            while(!SW0); /** wait until the user press & let go */
            break;
        }
        else if (!SW1) {
            demo = DEMO_ADC; /* demo adc */
            while(!SW1);
            break;
        }
    }
    /* select! */
    if (demo==DEMO_IO) {
        lcd_goto_line1();
        lcd_puts("MY18051 I/O DEMO");
        lcd_goto_line2();
        lcd_puts("                ");
        lcd_goto_line2();
        /** set timer 0 overflow every 50ms - with interrupt handler */
        loop = LOOP_COUNT; lcdi = 0; left = 0;
        P1 = 0xAA; LED0 = 0; IT0 = 1; IT1 = 1;
        EA = 1; ET0 = 1; EX0 = 1; EX1 = 1;
        TH0 = 0x4B; TL0 = 0xFD; TR0 = 1;
        /** main loop */
        while (1) {
            keyin = key_wait_922();
            if (keyin<10&&lcdi<LCD_MAX_CHAR) { /** numeric key! */
                lcd_data(keyin+0x30);
                lcdi++;
            }
            else if(keyin==0x0F) { /** '#' key! */
                lcd_goto_line2();
                lcd_puts("HASHED!        ");
                lcd_goto_line2();
                lcdi = LCD_MAX_CHAR;
            }
            else if(keyin==0x0E) { /** '*' key! */
                lcd_goto_line2();
                lcd_puts("               ");
                lcd_goto_line2();
                lcdi = 0;
            }
        }
    }
    else {
        lcd_goto_line1();
        lcd_puts("MY18051 ADC DEMO");
        lcd_goto_line2();
```

```
        lcd_puts("SW0:ADC, SW1:CLR");
        /* initialize adc */
        adc_init();
        adc = 0; adcgo = 0; EA = 1;
        /** adc status indicator */
        LEDRX = adc; LEDTX = !adc;
        /** main loop */
        while (1) {
            if (!SW0) {
                while (!SW0); /** wait until the user lets go */
                adc = !adc;
                adcgo = adc;
                if (!adcgo) {
                    ET1 = 0; TR1 = 0;
                    lcd_puts("*");
                }
                LEDRX = adc; LEDTX = !adc;
            }
            else if(!SW1) {
                while (!SW1); /** wait until the user lets go */
                lcd_goto_line2();
                lcd_puts("SW0:ADC, SW1:CLR");
            }
            if (adcgo) {
                adcgo = 0;
                lcd_goto_line2();
                lcd_puts("                ");
                /** read adc */
                check = adc_get_data();
                value = ((float) check / 255.0) * VREF;
                lcd_goto_line2();
                lcd_puts("ADC: ");
                float2str(display,value);
                lcd_puts(display);
                lcd_puts(" (");
                int2str(display,check);
                lcd_puts(display);
                lcd_puts(")");
                /** set timer 1 overflow every 50ms - with interrupt
handler */
                ET1 = 1; TH1 = 0x4B; TL1 = 0xFD; TR1 = 1;
            }
        }
    }
}
/*-------------------------------------------------------------------------
-------*/
```

2026/02/09 22:23

From:
https://azman.my1matrix.cc/ - **Azman @MY1**

Permanent link:
https://azman.my1matrix.cc/doku.php?id=dev8051:dev8051

Last update: **2026/02/08 03:46**