Core 8051

Microcontroller/board info.

Board51:stc15w204s (8-pin)

Picture





Block diagram

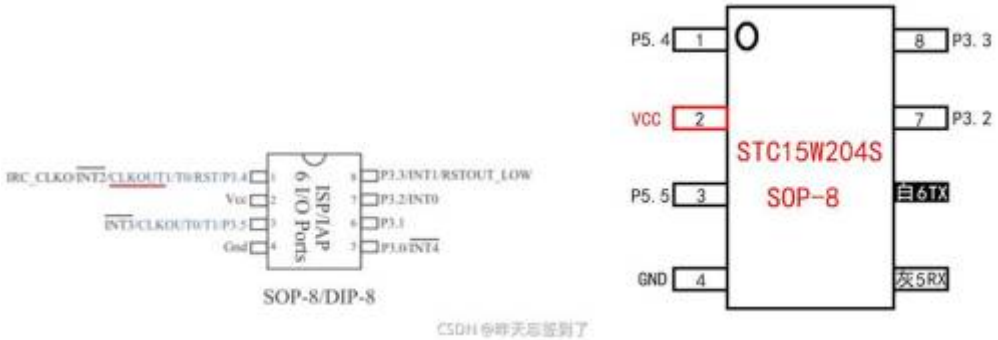

May need proper USB2serial cable (e.g. PL2303-based)

Connection:

- RED Wire – Power 5V, 500mA
- BLACK Wire – Ground
- WHITE Wire – RX
- GREEN Wire – TX

Features:

- Fully enclosed professional finish.
- Built-in PL2303 USB to Serial Controller
- Designed to be used for USB to TTL electronic projects
- TTL interface output, easy to connect to your MCU
- Dual 3.3V and 5V Power output (by Changing the red wire termination)
- Can independently power the circuit with 5V or 3.3V

From:
https://azman.my1matrix.cc/ - **Azman @MY1**

Permanent link:
https://azman.my1matrix.cc/doku.php?id=dev8051:core8051

Last update: **2026/02/08 03:46**